RADIAFLEX® the Optimal confined-coverage solution

A unique broadband solution, ensuring the most futureproof confined coverage installation

Contents

RADIAFLEX® Introduction

Introduction to WINS – Wireless Indoor Solutions

RADIAFLEX® the Optimal confined-coverage solution

Wireless has made the move indoors – RADIAFLEX® is an important part of the solution

RADIAFLEX® is the world's leading, leaking feeder' cable solution. Designed to provide, contoured' RF indoor coverage, RFS RADIAFLEX® cable provides a scaleable and practical means of tailoring RF coverage in even the most challenging of confined spaces.

Futureproof confined coverage

RADIAFLEX® is a unique broadband solution, ensuring the most futureproof confined coverage installation.

Broadband solution - RADIAFLEX® supports all major services up to 6 GHz and is therefore optimally suited for multi-operator and multi-band applications.

Flame and Fire retardancy - RADIAFLEX® cable is a low-smoke and halogen-free cabling solution that meets all major international flame- and fire-retardancy standards.

Low loss – Featuring low longitudinal and coupling losses, RADIAFLEX® is available with optional 'vario' coupling loss configurations for longer installation runs.

Comprehensive range – With diameters spanning 1/2-inch to 1 5/8-inch, the RADIAFLEX® family is available in a broad selection of jacketing, coupling losses and bending radii.

RADIAFLEX® is available in seven distinct series:

ALF/RLF series – Heavy-duty wideband radiating cable for multi-use applications in tunnels of all kinds

RLK series – Low coupling-loss radiating cable for tunnel and building applications

RAY series – Optimized for high-frequency and digital in-building and tunnel applications, where low coupling loss is required

RCF series – Small bending radii "corrugated outer" radiating cable for heavy duty applications in buildings and underground mines

RSF series – Flexible "corrugated outer" radiating cable solution for in-vehicle applications

RE60 series – Worldwide unique RADIAFLEX® RE60 radiating waveguide which is the leading edge solution for in-tunnel wireless applications in the 5-6 GHz band

Tailor-made Cables – Cables engineered to meet new or special customer requirements

RADIAFLEX® Cables Selection Guide

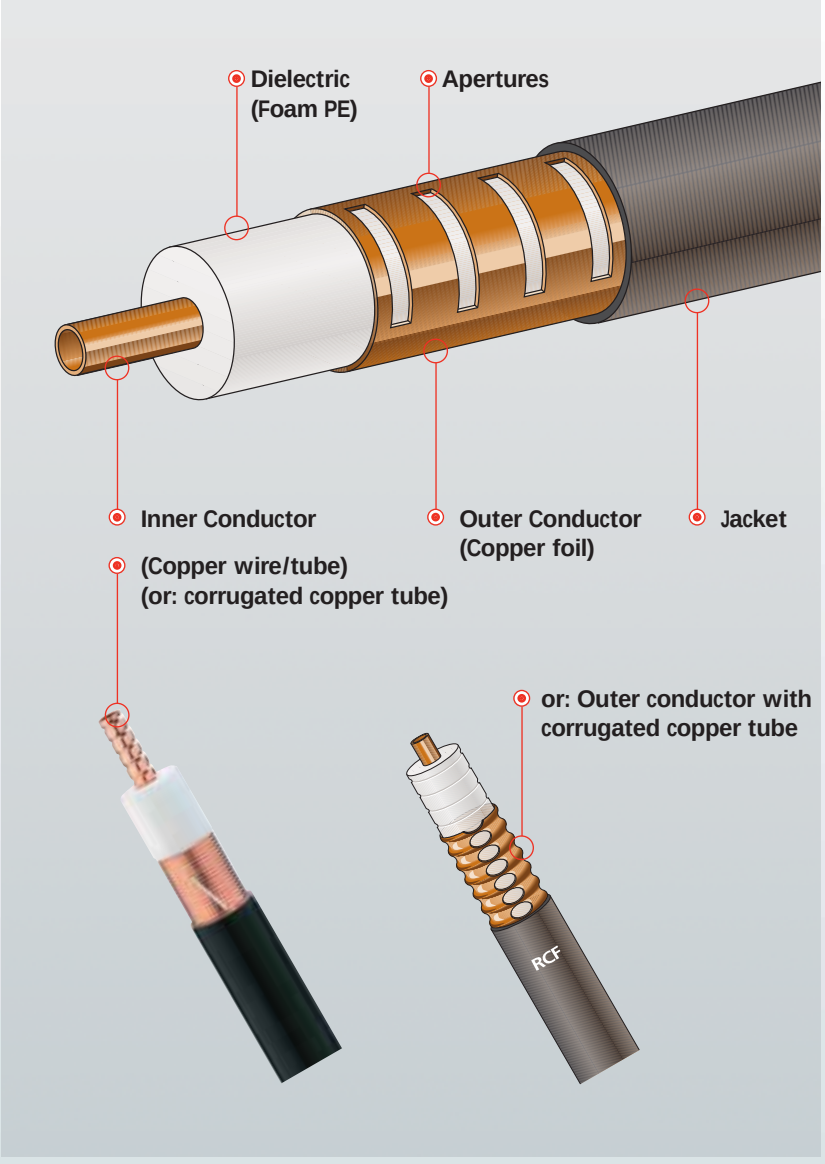

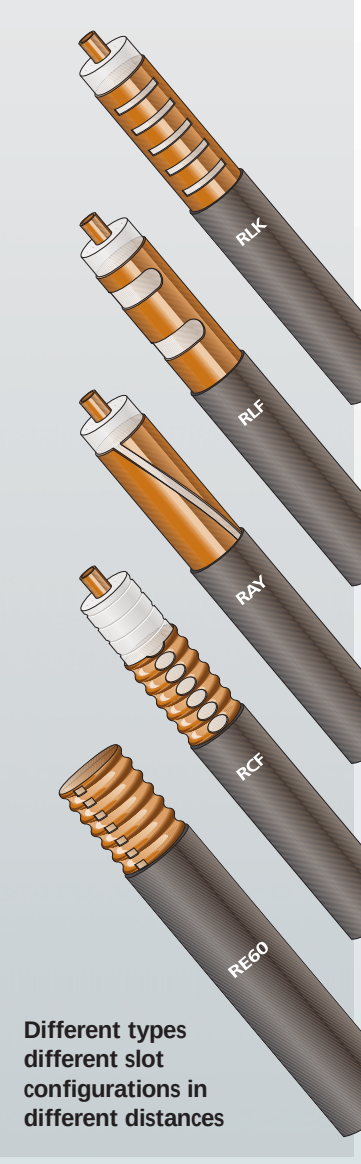

Different types different slot configurations in different distances

RADIAFLEX® Cables Selection Guide - RLK

Cable Sizes
1/2”, 7/8”, 1 1/4” and 1 5/8”

Apertures
Slot groups in short intervals of approx. every meter

Frequencies

Lowband	(RLK***L***)	75 - 600 MHz
Standard	(RLK)	75 - 960 MHz
Wide band	(RLK***W***)	75 - 1900 MHz
Ultra wideband	(RLK***U***)	75 - 2700 MHz
Data	(RLK***D***)	800 - 6000 MHz (1/2” only)

Features
- Broadband balanced low coupling loss, ideally suitable for various wireless technologies and applications (e.g. TETRA, 2G, 3G, 4G, WiFi)
- Optimized performance for a variety of individual frequency bands up to 2700 MHz

Typical Applications
1/2” and 7/8”: buildings and tunnels

RADIAFLEX® Cables Selection Guide - RLF

Cable Sizes
7/8”, 1 1/4” and 1 5/8”
1/2” as ALFU

Apertures
Slot groups in large intervals of approx. 22 m

Frequencies

Standard (RLF)	75 - 960 MHz
Ultra wideband (RLF***U***)	75 - 2400 MHz

Features
Robust, low loss, broadband, negligible influence of dust, salt and moisture accumulation on cable loss

Typical Applications
Single and multi band systems in long tunnels and aggressive environments. Single lengths should not be less than 80m

RADIAFLEX® Cables Selection Guide

RADIAFLEX® Cables Selection Guide - RAY

Cable Sizes
7/8”, 1 1/4” and 1 5/8”

Apertures
Groups of slope slots at short intervals of approx. 50 cm or less

Frequencies

Standard	(RAY)	75 - 960 MHz	
Ultra wideband	(RAY***U***)	75 - 2400 MHz	
Ultra wideband	(RAY***S***)	75 - 2700 MHz	(LTE ready)
Narrowband	(RAY***T***)	2400 - 2500 MHz (signaling and Wi-Fi)	

Features
- very low coupling loss (radiating mode)
- Optimized for high frequencies and digital transmission
- Optimized for vertical antennas

Typical Applications
In-building and dry tunnels

RADIAFLEX® Cables Selection Guide - RSF / RCF

Cable Sizes

RSF:	1/2”
RCF:	1/2”, 7/8”, 1 1/4” and 1 5/8”

Apertures
Milled slots on corrugated outer conductor

Frequencies

RSF	75 - 2700 MHz
RCF12	75 - 6000 MHz
RCF rest	75 - 2700 MHz

Features
- robust and low bending radius
- superior physical properties, similar as for CELLFLEX / HELIFLEX product family

Typical Applications
In-building and mines

RADIAFLEX® Cables Selection Guide – RE60

Cable Sizes

Elliptical waveguide, Diameter over Jacket, mm (in)
56 x 33mm (2.2 x 1.3in).

Apertures

Milled slots on corrugated copper tube

Frequencies

In-tunnel wireless applications in the 5-6 GHz band

Features

- World's first distributive antenna for in-tunnel 6 GHz WiFi applications aimed at target system length of up to 1 km
- Allowing for future-proof system concepts
- Easy system upgrades with regards to carrier extension and / or increasing capacity requirements. Ideal alternative to today's 2.4 GHz signalling applications with limited RF bandwidth / data throughput
- Lowest system loss performance: the RE60 has a comparable system loss at 6 GHz than radiating cables operating in the 2.4 GHz ISM band

Typical Applications

- Highest data throughput (bandwidth) demands in 6 GHz wireless transmission systems
- All kind of capacity driven in-tunnel wireless communication applications as e.g. track-to-train communication / CBTC
- Ideal wireless backhaul solution for on-board IP equipment as access points or small Cell equipment

RADIAFLEX® Cables Selection Guide

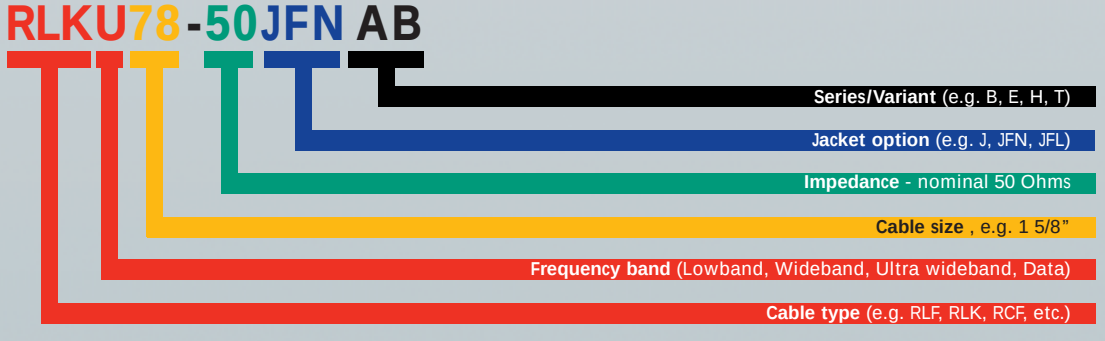

RADIAFLEX® Cables Selection Guide

Technology (Frequency) / Cable types	FM PMR 75-110 MHz	PMR 150-170 MHZ	TETRA PMR TETRAPOL 380-500 MHz	CDMA TDMA GSM900 GSM-R LTE UMTS900 698-960 MHz	GSM1800 PCN DECT 1.7-1.9 GHz	UMTS2100 1.9-2.2 GHz	LTE ISM WLAN WIFI WiMax 2.4-2.7 GHz	WiMax 3.5 GHz	WLAN WIFI 5-6 GHz
ALFU12-50A	•	•	•	•	•	•	•	-	-
RLF78-50A	•••	••	•	••	-	-	-	-	-
RLF114-50A	•••	••	•	••	-	-	-	-	-
RLF158-50A	••	••	•	••	-	-	-	-	-
RLFU78-50A	••	••	•	••	•••	•••	-	-	-
RLFU114-50A	••	••	•	••	••	•••	-	-	-
RLFU158-50A	••	••	•	••	•••	•••	-	-	-
RLKL78-50A	••••	••••	•••	-	-	-	-	-	-
RLKL114-50A	••••	••••	•••	-	-	-	-	-	-
RLKL158-50AD	••••	••••	••••	-	-	-	-	-	-
RLK12-50A	••••	•••	••••	•••	-	-	-	-	-
RLK78-50A	••••	•••	••••	•••	-	-	-	-	-
RLK114-50A	••••	••	••••	•••	-	-	-	-	-
RLK158-50A	••••	••	••••	•••	-	-	-	-	-
RLK158-50AD	••••	••••	••••	••••	-	-	-	-	-
RLKW12-50A	••••	•••	•••	••••	••••	-	-	-	-
RLKW78-50A	••••	•••	•••	••••	••••	-	-	-	-
RLKW114-50A	•••	•••	•••	••••	••••	-	-	-	-
RLKU12-50A	••	••	•	•••	•••	••••	••••	-	-
RLKU78-50A	••	••	•	••	•••	••••	••••	-	-
RLKU114-50A	••	••	•	••	•••	••••	••••	-	-
RLKU158-50A	••	•	•	••	•••	••••	••••	-	-
RLKU158-50AE	••	•	•	•••	••••	••••	-	-	-
RLKU158-50AH	••	•	•	•••	••••	••••	••••	-	-
RLKD12-50A	-	-	-	•••	•••	•••	•••	••••	••••
RE60 (Waveguide)	-	-	-	-	-	-	-	-	••••
RAY78-50A	•••	••	•••	••••	-	-	-	-	-
RAY114-50A	••	•	•••	••••	-	-	-	-	-
RAY158-50A	••	•	•••	••••	-	-	-	-	-
RAY78-50AB	•••	••	•••	••••	-	-	-	-	-
RAY114-50AB	•••	•	•••	••••	-	-	-	-	-
RAYS158-50A	••	••	••	••••	••••	••••	••••	-	-
RAYT114-50A	-	-	-	-	-	-	••••	-	-
RAYT158-50A	-	-	-	-	-	-	••••	-	-
RAYU158-50A	•	•	•	••••	••	••	-	-	-
RAYU158-50AT	-	-	-	••••	••••	••••	-	-	-
RSF12-50	•	•	•	•	•	•	•	•	•
RCF12-50	•	•	•	•	•	•	•	•	•
RCF78-50A	•	•	•	•	•	•	•	•	-
RCF114-50A	•	•	•	•	•	•	•	-	-
RCF158-50A	•	•	•	•	•	•	•	-	-

Technology (Frequency) / Cable types	Type of aperture	Remarks
ALFU12-50A	Groups of apertures at large intervals (single lengths should not be less than 80 m (262 ft)	Negligible influence of dust/salt/moisture accumulation
RLF78-50A		
RLF114-50A		
RLF158-50A		
RLFU78-50A		
RLFU114-50A		
RLFU158-50A		
RLKL78-50A	Groups of apertures at short intervals	Low coupling loss 1/2" to 7/8": recommended in buildings 7/8" to 1 5/8": recommended for tunnels
RLKL114-50A		
RLKL158-50AD		
RLK12-50A		
RLK78-50A		
RLK114-50A		
RLK158-50A		
RLK158-50AD		
RLKW12-50A		
RLKW78-50A		
RLKW114-50A		
RLKU12-50A		
RLKU78-50A		
RLKU114-50A		
RLKU158-50A		
RLKU158-50AE		
RLKU158-50AH		
RLKD12-50A		
RE60 (Waveguide)	Milled slots	Corrugated outer conductor
RAY78-50A	Groups of slope slots at short intervals	- Low coupling loss - Optimized for digital transmission
RAY114-50A		
RAY158-50A		
RAY78-50AB		
RAY114-50AB		
RAYS158-50A		
RAYT114-50A		
RAYT158-50A		
RAYU158-50A		
RAYU158-50AT		
RSF12-50	Milled slots	- Corrugated outer conductor - Robust, low bending radius
RCF12-50		
RCF78-50A		
RCF114-50A		
RCF158-50A		

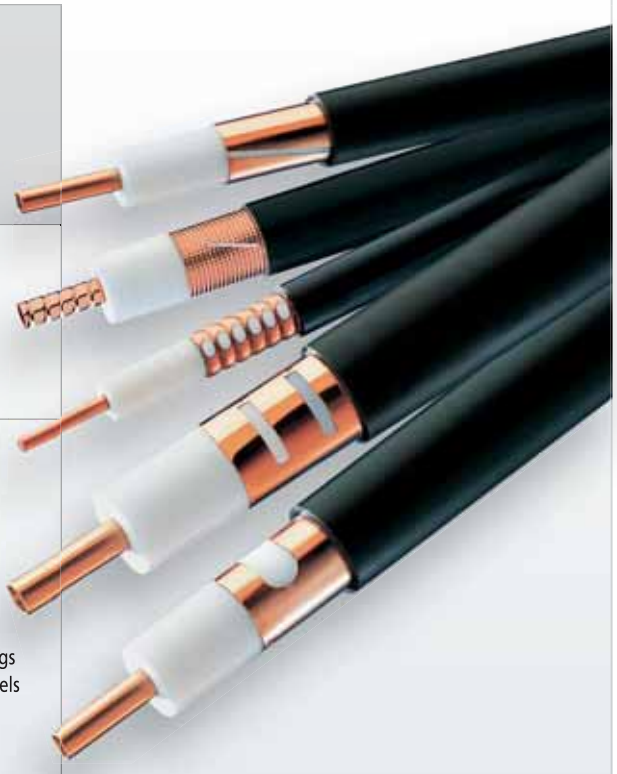

Legend

- •••• best in class
- ••• recommended
- •• operating properly
- • functional
- - not functional

Polarization of RADIAFLEX® Cables

Impact of Cable Positioning

Cable installation positioning options

1 Ceiling installation
2 Wall installation above train height
3 Wall installation at window height

Receiving antenna positioning options

- Antenna installation on the train roof (usually vertically polarised)
- Mobile devices in the train (undefined polarisation)

The main polarization of RADIAFLEX® Cables depends on the model and can be Horizontal, Vertical or Axially Directive.

RADIAFLEX® Cable polarization for optimum performance

Technology (frequencies)	Horizontal	Vertical	Axially Directive
FM / PMR 75–110 MHz	RLKL RLKW RLK	RAY	RLKL AD RLK AD
PMR 150–170 MHz	RLKL RLKW RLK	RAY	RLKL AD RLK AD
TETRA / PMR / TETRAPOL 380-500 MHz	RLKL RLKW RLK	RAY	RLKL AD RLK AD
LTE 700 698-790 MHz	RLKU (AH) RLKW	RAY RAYS	RLK AD
GSM-900 GSM-R 900	RLK RLKW RLKU RLKU (AH)	RAY RAYS RAYU (AT)	RLK AD
GSM-1800 GSM-R 1800 UMTS 2100 1710-2200 MHz	RLKU RLKU (AH)	RAYS	
WiFi 2500 2400-2500 MHz	RLKU RLKU (AH)	RAYS RAYT	
LTE 2600 2300-2600 MHz	RLKU RLKU (AH)	RAYS	

RADIAFLEX® Cables Selection Guide

Flame and Fire Retarding Jackets

STANDARD (International, European & National)		JACKET OPTION		
		J[1)]	JFN[1)]	JFL[1)]
IEC 60754-1/-2	Halogen free, non-corrosive	✓	✓	✓
IEC 60332-1 EN 50265-2-1 DIN VDE 0482 Teil 265-2-1	flame test		✓	✓
IEC 60332-3-24 (Category C) EN 50266-2-4 DIN VDE 0482 Teil 266-2-4	cable bundle test		✓[2)]	✓
IEC 61034 EN 50268-2 DIN VDE 0482 Teil 268-.2	low smoke emission		✓[3)]	✓

1) This includes additional design/tuning options indicated with an additional letter, e.g. new A-series of Radiaflex cables: JA, JFNA, JFLA

2) Not for RCF and RSF type

3) RFS RADIAFLEX® radiating cables with jacket option JFN are low smoke and exhibit excellent flame and fire retardant performance. To characterize the low smoke behavior of RFS cables under fire conditions, RFS applies the test method as described in IEC 61034 low smoke emission.
Considering the application of radiating cables (not installed in bundles) the test is done with one sample for all cable sizes.

RADIAFLEX® Connectors Overview

For flat-foil outer conductor radiating cable types (RLF/ALF/RLK/RAY)

Description	Model Number
Connectors for RADIAFLEX 1/2" (not for RSF resp. RCF)	
Connector N-male	NM-RA12-011
Connector N-female	NF-RA12-012
Connectors for RADIAFLEX 7/8" (not for RSF resp. RCF)	
Connector 7-16-male	716M-RA78-015
Connector 7-16-female	716F-RA78-016
Connector N-male	NM-RA78-015
Connector N-female	NF-RA78-016
Connectors for RADIAFLEX 1 1/4" (not for RSF resp. RCF)	
Connector 7-16-female	716F-RA114-016
Connector 7-16-female, premium PIM -150dBc	716F-RA114-P01
Connector N-female	NF-RA114-016
Connectors for RADIAFLEX 1 5/8" (not for RSF resp. RCF)	
Connector 7-16-female	716F-RA158-016
Connector 7-16-female, premium PIM -150dBc	716F-RA158-P01
Connector N-female	NF-RA158-016
Installation tools for RADIAFLEX premium connectors	
Preparation Tool for flat foil RADIAFLEX 1 1/4" Connectors	TRIM-SET-R114-P01
Insert Kit for TRIM-SET-R114-P01	TRIM-IR114-P01
Preparation Tool for flat foil RADIAFLEX 1 5/8" Connectors	TRIM-SET-R158-P01
Insert Kit for TRIM-SET-R158-P01	TRIM-IR158-P01

For milled, corrugated outer conductor radiating cable types (RSF/RCF/RHCA), please select connectors from the corresponding RF feeder (non-radiating cable) types (SCF/LCF).

New PIM improvement in RADIAFLEX® connectors

PIM or Passive InterModulation is a major aspect of today's high performance wireless communication systems, because it can cause a major adverse effect on the quality of service and performance of a typical communications site. A new series of PIM optimized RADIAFLEX connectors has been designed to complement the RFS offer and to ensure highest network performance by simplifying connector installation.

PIM connector
The heat shrink sleeve belongs to the connector

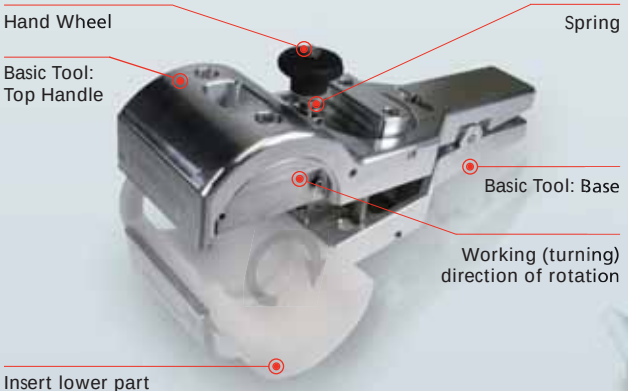

Tool inserts
Plastic Collet and metal blade holder

RADIAFLEX® Accessories

Considerations and clamp spacing

Installation of RADIAFLEX® cables

Together with the RADIAFLEX® cables complete sets of installation material are offered. This installation material has to fulfill various different requirement in order to ensure trouble-free RF operation during the entire lifetime of the radiating cable being installed. Moreover, the installation material has to fulfill safety aspects in case of a fire impact. RFS' installation material and installation method fit to all these requirements.

General consideration for installation

As a radiating cable has to be considered as a ‚long antenna', the RF transmitted and received by the cable follows the same principal physical rules as for a common compact antenna. Therefore, there already has to be considered basic rules where to install the cable. For example, a radiating cable always requires a minimum distance from the walls and other cables. Putting it into cable ducts or behind false ceilings with screening effects would influence the performance severely. Generally, the radiating cable should always ‚see' the mobile for proper operation. Obstacles between the radiating cable and the mobile user causes more or less losses depending on the material, which have to be considered during the system planning phase.

Installation on the wall / ceiling

This is most common kind of installation of RADIAFLEX®. Using CLIC-clamps and round bases ensures a quick fastening of the cable by just pushing the cable into the clamp by hand. The size of the round base guarantees the correct distance to the wall.

For fast speed train application in tunnels a special heavy-duty clamp has been deployed for cable sizes of 1 1/4" and 1 5/8" (HDC series).

This heavy-duty clamp features the additional assembling of up to four CLIC-clamps. Those CLIC-clamps are easily snapped onto the heavy-duty clamp without the need of any tool. It allows to install other cables, like fiber optic cables, along the RADIAFLEX® and is then useful for all kind of train tunnels.

Installation on messenger wire

The other method to install RADIAFLEX® cables is the use of messenger wires. Again, the offered installation material guarantees the correct installation of the cable for all frequencies.

Clamp spacing

For proper long-term operation, a minimum clamp spacing is recommended. It depends on the cable size of the cable to be installed. The recommended clamp spacing is valid for the installation with:

- CLIC-clamp and round base
- heavy-duty clamp
- messenger wire with cable tie

Recommended clamp spacing

The following recommended clamp spacing is valid for all RADIAFLEX® series.

1/2"	0.3 m (12") for RSF12-50
	0.5 m (20") for other radiating 1/2" cables
7/8"	0.9 m (3 ft)
1 1/4"	1.3 m (4.25 ft)
1 5/8"	1.5 m (5 ft)

Standard Clic clamp with round base

Safe and efficient installation of RADIAFLEX® cable with Clic-clamps.
For train speeds up to 140 km/h.

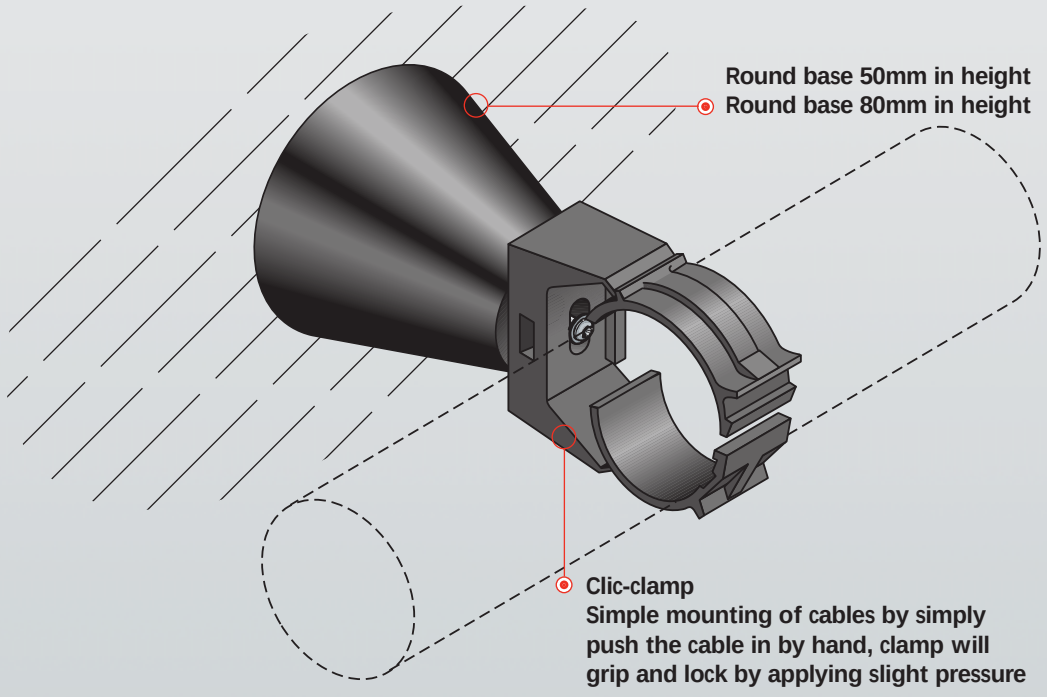

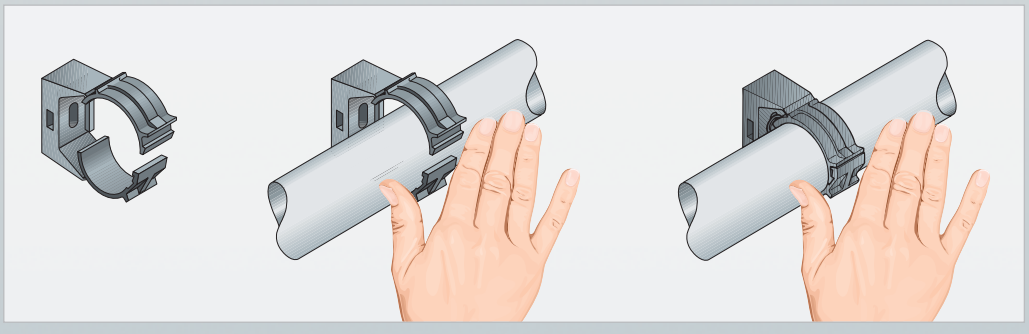

Clamps for fire protection installation

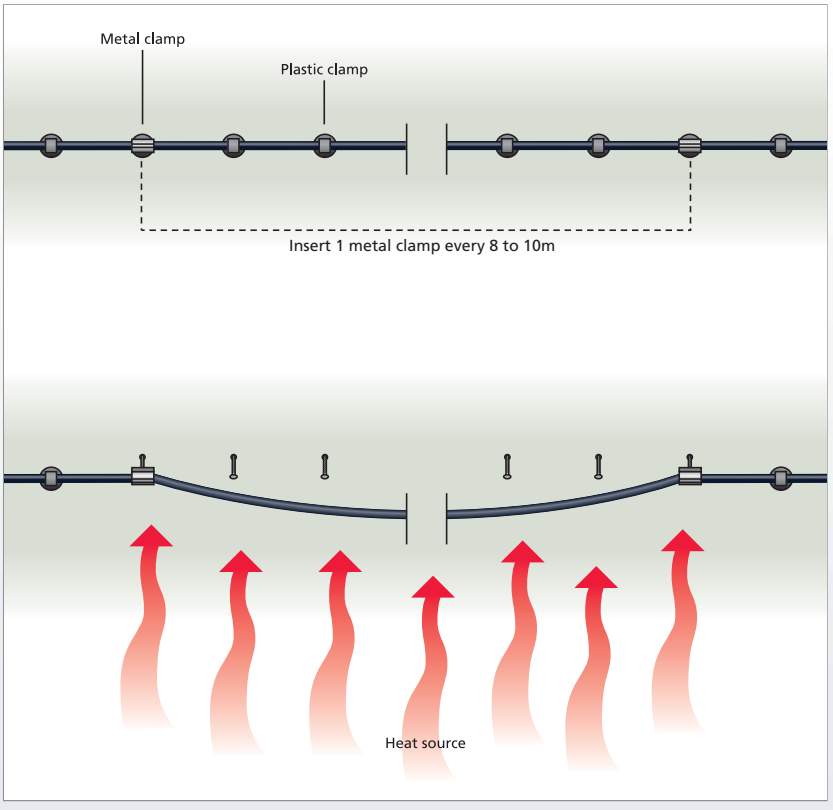

In case of fire the resistant part of the fixing will hold the cable in position and enables the cable to keep in operation as long as the cable itself allows. It also prevents the cable from detaching from the wall that might block any escape route.

Heavy-duty clamp

Protection against rough air turbulences.
For train speeds up to 350 km/h.

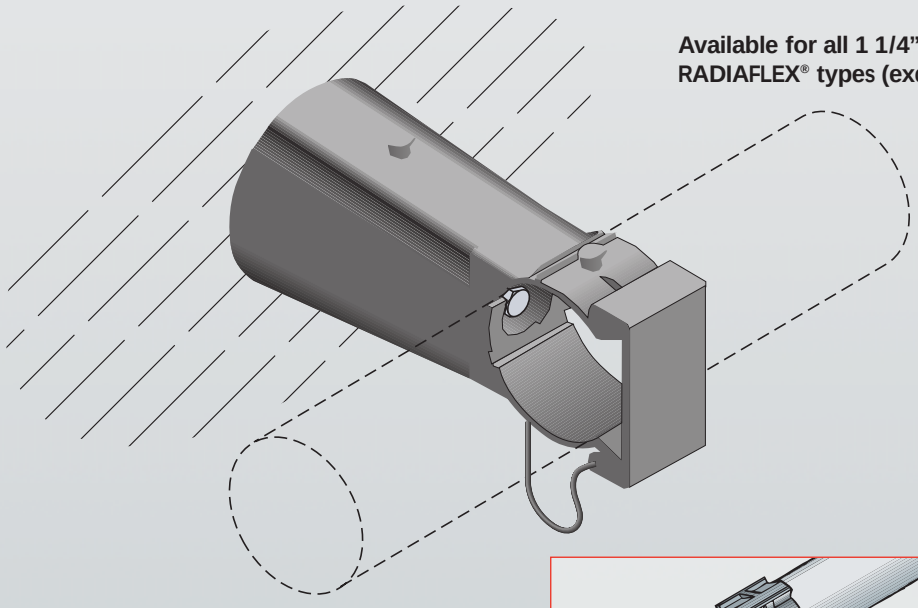

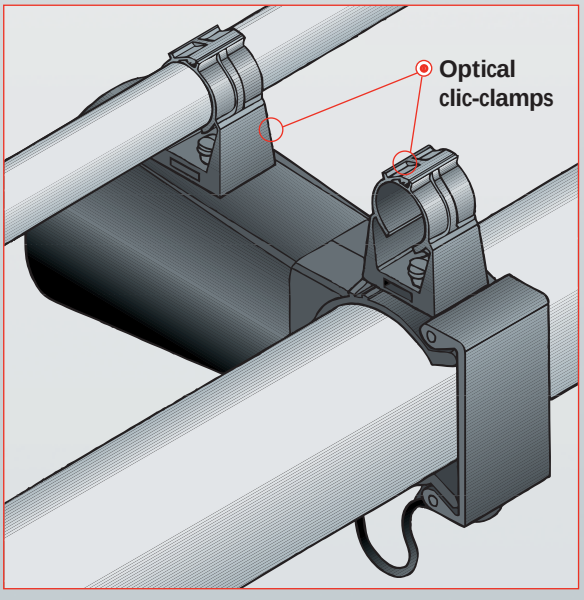

Standard Clic clamp with round base

Round base available in height of 50mm & 80mm.

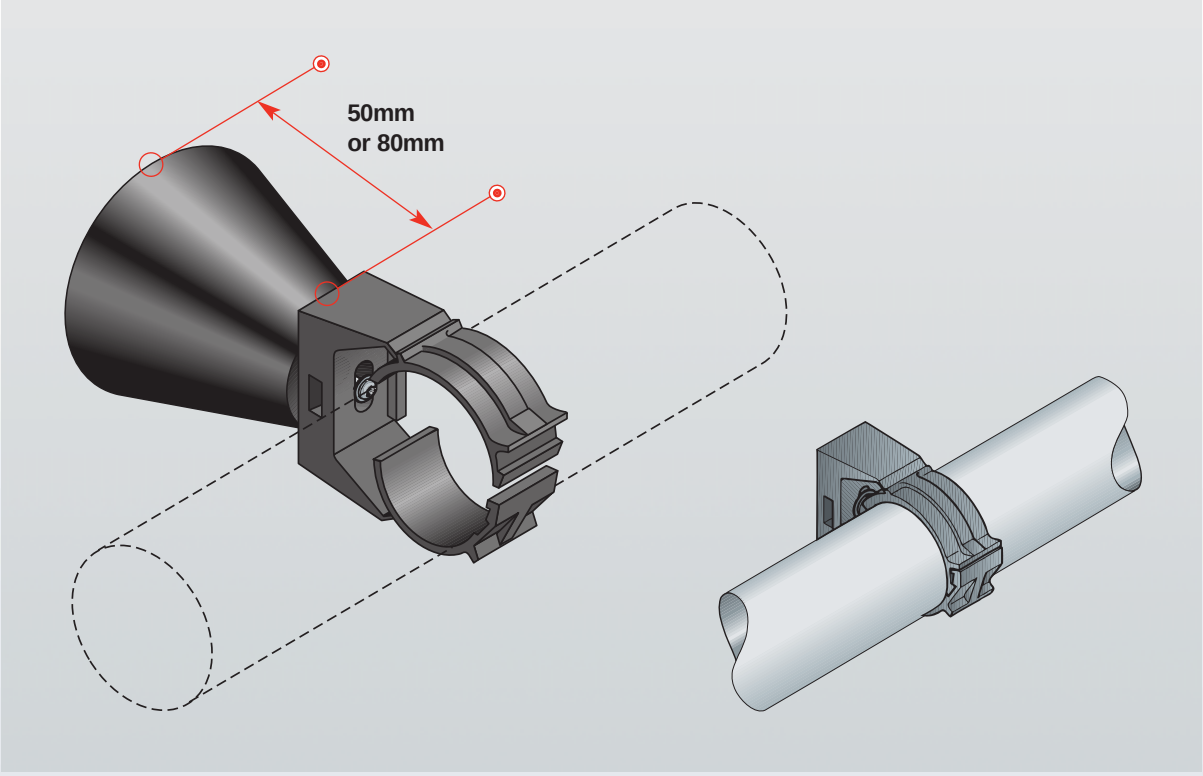

	recommended min. wall distance	
Cable	50 mm (2”) cone	80 mm (3.15”) cone
ALFU / RLF / RLFU	x	
RLKL / RLK / RLKW / RLKU / RLKD		x
RAY / RAYU / RAYS / RAYT		x
RSF / RCF	x	
RE60	x	

RADIAFLEX® Cable with CLIC clamps

Material:

CLIC clamp: polyamide, black, halogen-free, fire class UL94HB

Round base: polypropylene, black, halogen-free, fire class UL94HB

RSB clips / screws: stainless steel

Operating temperature: -40°C to 85°C (-40°F to 176°F)

RFS recommends the insertion of 1 metal clamp for every 8 to 10m.

		Dimensions
Round base	RB-50-4	50 mm (2") in height
Round base	RB-80-4	80 mm (3.15") in height
Screw	SC-4595-2	4.5 x 95 mm (.18 x 3.74")
Screw	SC-45125-2	4.5 x 125 mm (.18 x 4.92")
Drilling hole for	PLUG-6-1	6 x 35 mm (.24 x 1.38")
Screw	S-865-2	M8 x 65 mm (M8 x 2.56")
Screw	S-895-2	M8 x 95 mm (M8 x 3.74")
Drilling hole for	PLUG-8-2	10 x 35 mm (.39 x 1.38")

Standard Installation:

Type	Round Base	CLIC-clamp	Screw	Plastic Plug
Cable Size 1/2"				
ALF	RB-50-4	CC-12-2	SC-4595-2	PLUG-6-1
RLK	RB-80-4	CC-12-2	SC-45125-2	PLUG-6-1
RCF	RB-50-4	CC-12-2	SC-4595-2	PLUG-6-1
RSF	RB-50-4	CC-12-2	SC-4595-2	PLUG-6-1
Cable Size 7/8"				
RLF	RB-50-4	CC-78-2	SC-4595-2	PLUG-6-1
RLK	RB-80-4	CC-78-2	SC-45125-2	PLUG-6-1
RAY	RB-80-4	CC-78-2	SC-45125-2	PLUG-6-1
RCF	RB-50-4	CC-78-2	SC-4595-2	PLUG-6-1
Cable Size 1 1/4"				
RLF	RB-50-4	CC-114-2	SC-4595-2	PLUG-6-1
RLK	RB-80-4	CC-114-2	SC-45125-2	PLUG-6-1
RAY	RB-80-4	CC-114-2	SC-45125-2	PLUG-6-1
RCF	RB-50-4	CC-114-2	SC-4595-2	PLUG-6-1
Cable Size 1 5/8"				
RLF	RB-50-4	CC-158-2	SC-4595-2	PLUG-6-1
RLK	RB-80-4	CC-158-2	SC-45125-2	PLUG-6-1
RAY	RB-80-4	CC-158-2	SC-45125-2	PLUG-6-1
RCF	RB-50-4	CC-158-2	SC-4595-2	PLUG-6-1

Fire Protection Installation:

Type	Round Base	Steel clamp	Screw / Washer	Metal Plug
Cable Size 1/2"				
ALF	RB-50-4	RSB-12	S-865-2 + W-84-2	PLUG-8-2
RLK	RB-80-4	RSB-12	S-895-2 + W-84-2	PLUG-8-2
RCF	RB-50-4	RSB-12	S-865-2 + W-84-2	PLUG-8-2
RSF	RB-50-4	RSB-12	S-865-2 + W-84-2	PLUG-8-2
Cable Size 7/8"				
RLF	RB-50-4	RSB-78	S-865-2 + W-84-2	PLUG-8-2
RLK	RB-80-4	RSB-78	S-895-2 + W-84-2	PLUG-8-2
RAY	RB-80-4	RSB-78	S-895-2 + W-84-2	PLUG-8-2
RCF	RB-50-4	RSB-78	S-865-2 + W-84-2	PLUG-8-2
Cable Size 1 1/4"				
RLF	RB-50-4	RSB-114	S-865-2 + W-84-2	PLUG-8-2
RLK	RB-80-4	RSB-114	S-895-2 + W-84-2	PLUG-8-2
RAY	RB-80-4	RSB-114	S-895-2 + W-84-2	PLUG-8-2
RCF	RB-50-4	RSB-114	S-865-2 + W-84-2	PLUG-8-2
Cable Size 1 5/8"				
RLF	RB-50-4	RSB-158-001	S-865-2 + W-84-2	PLUG-8-2
RLK	RB-80-4	RSB-158-001	S-895-2 + W-84-2	PLUG-8-2
RAY	RB-80-4	RSB-158-001	S-895-2 + W-84-2	PLUG-8-2
RCF	RB-50-4	RSB-158	S-865-2 + W-84-2	PLUG-8-2

Cable tie for installation on messenger wire

Base material:

Tie: polyamide 6.6 UV resistant
Lock: polypropylene, UV resistant
Fire class: UL94HB, halogen-free
Operating temperature: -40°C to 85°C (-40°F to 176°F)

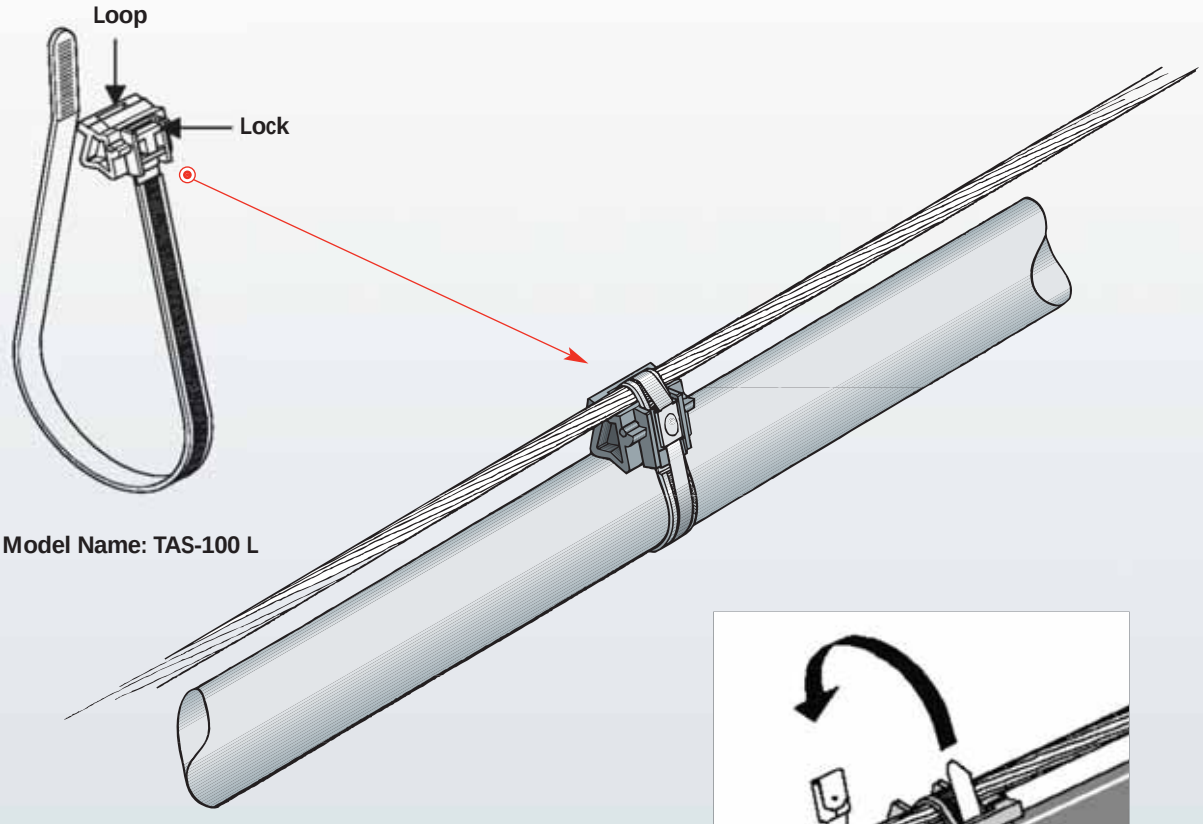

Model Name: TAS-100 L

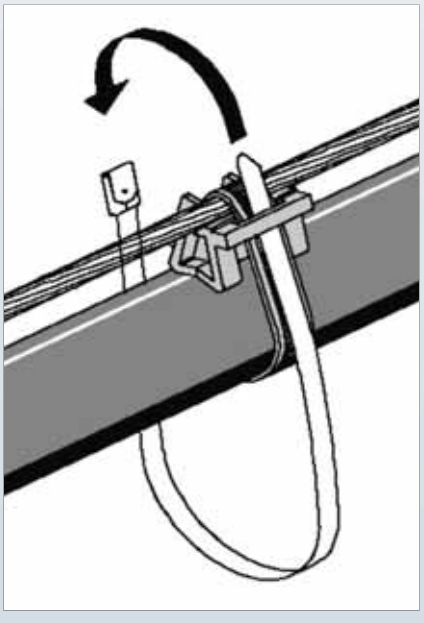

Additional Metal Tie for fire protection
Model name: MBT-14S

Radiating Cable Basics

- **Coaxial cable designed and constructed to radiate and receive RF energy over it's entire length.**
- **Designed to replace traditional antennas**
- **Ensure line of sight everywhere between radio system and antenna**
- **Combined with other indoor solutions products to enhance RF coverage**

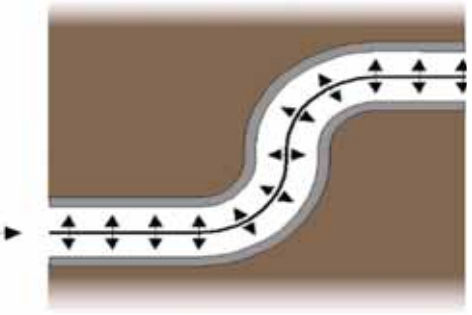

Normal RF cable

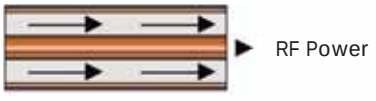

Radiating cable

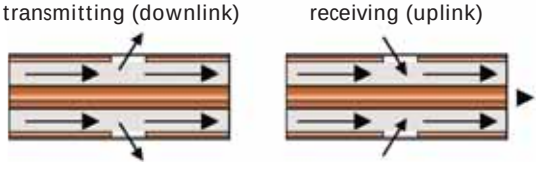

How is this done?

By cutting holes or slots in the outer conductor of coaxial cables, enabling RF power to enter or leave the cable.

Frequency Range

The design of the apertures in the outer conductor influences the frequency for which the cable is optimized. RADIAFLEX® cables are usually classified into categories: for operation up to 960 MHz, 1900 MHz and 2700 MHz (6000 MHz). Cables optimized for special frequency ranges are available on request

Longitudinal Loss

This is a measure of signal loss in the cable over its entire length

Coupling Loss

This is a measure of the signal loss between the cable and a test receiver at a distance of 2m (6.5ft)

System Loss

This is the sum of longitudinal loss and coupling loss

Reception probability

50% - where 50 percent of all measured samples are better than stated performance figures

95% - where 95 percent of all measured samples are better than stated performance figures

Longitudinal loss a_l
Signal loss in cable

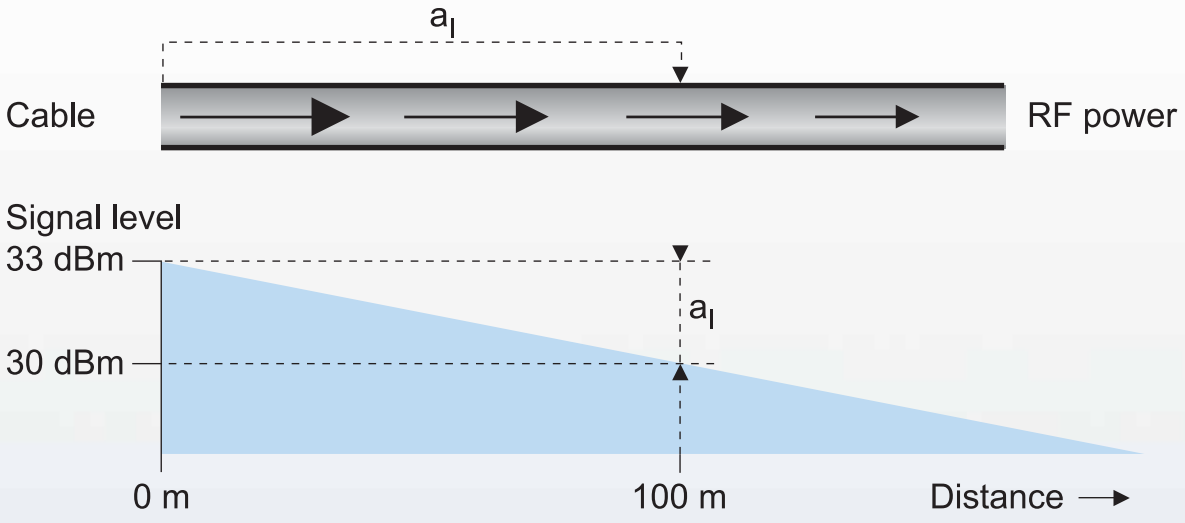

Example: a_l = 3 dB / 100 m
Note: a_l increases with frequency!

Coupling loss a_c
Signal loss between cable and mobile device

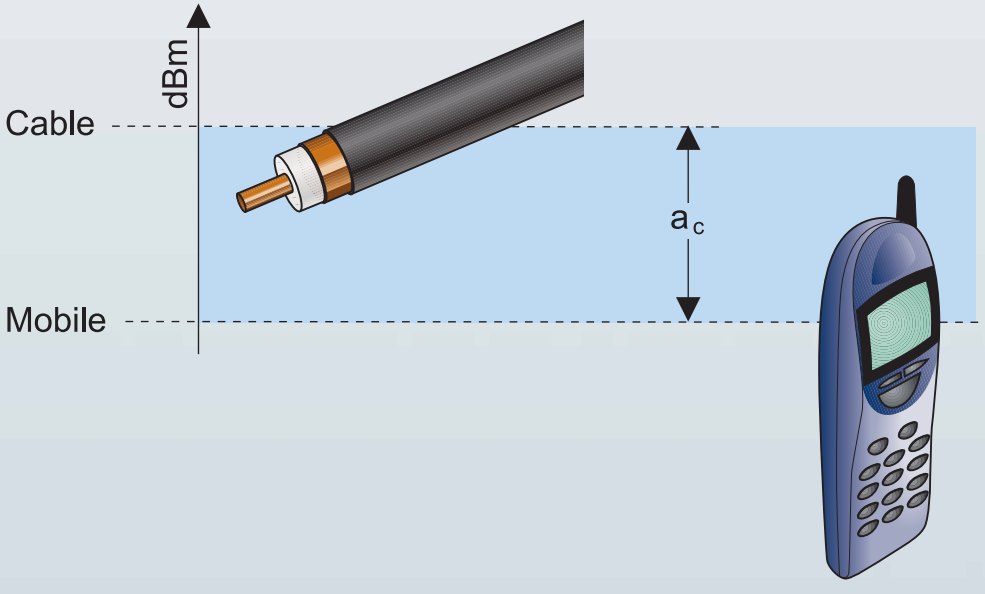

Radiating Cable Basics

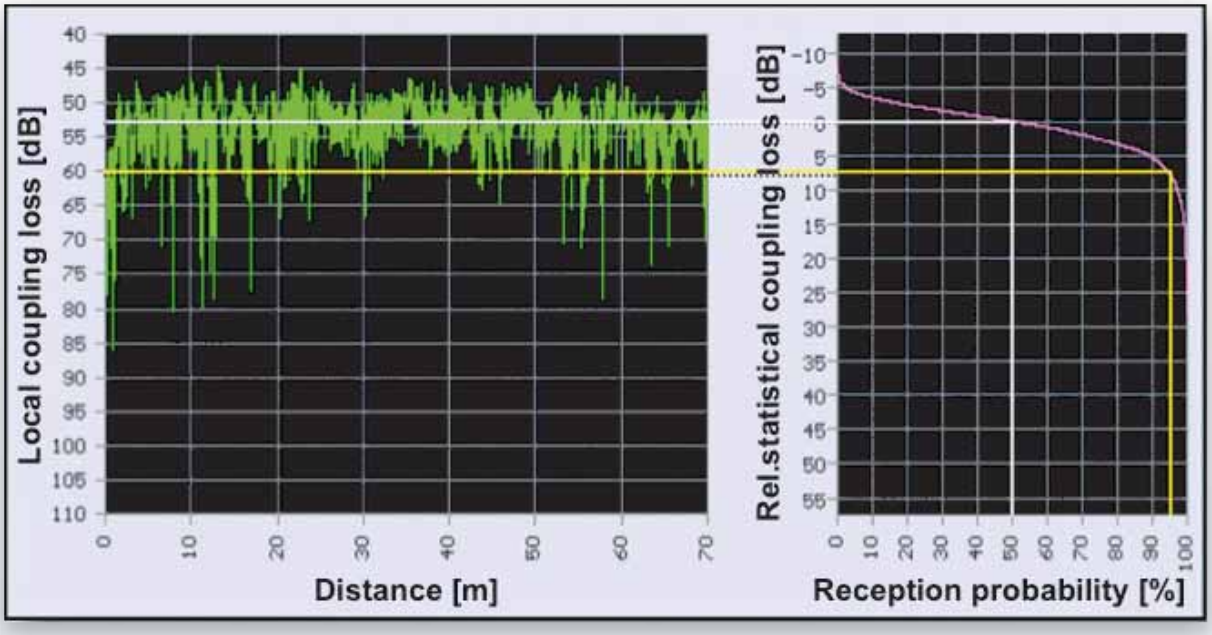

According to IEC 61 196-4

Standard measurement along a cable run of approx. 100 m length

Measurement conditions

- Free space
- No environmental influences
- No tunnel effects

Coupling loss measured by

• Height above ground	2 m
• Distance between cable and antenna	2 m
• Type of antenna	λ/2 dipole
• Spatial orientation of dipole antenna	radial, orthogonal or parallel

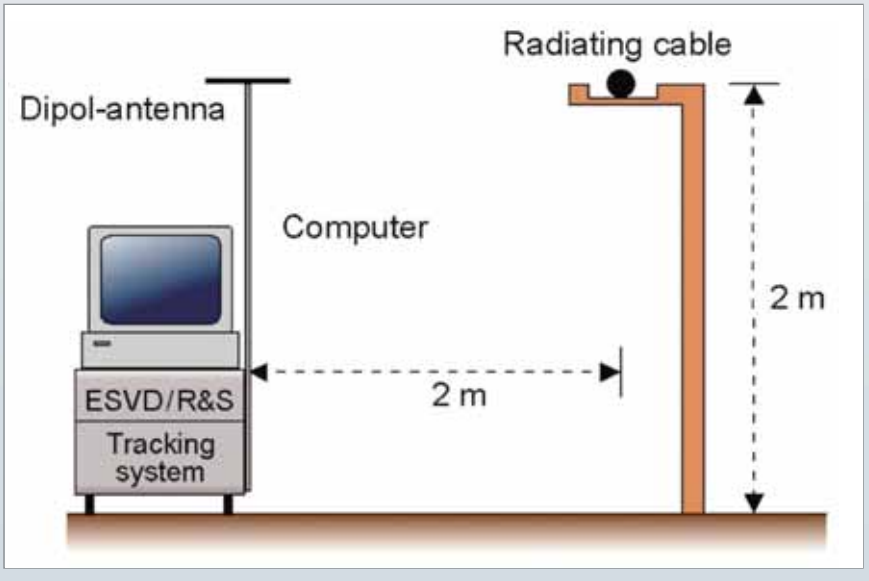

RFS data sheets show coupling loss for 50% and 95% reception probability

RADIAFLEX® for In-Tunnel LTE and MIMO

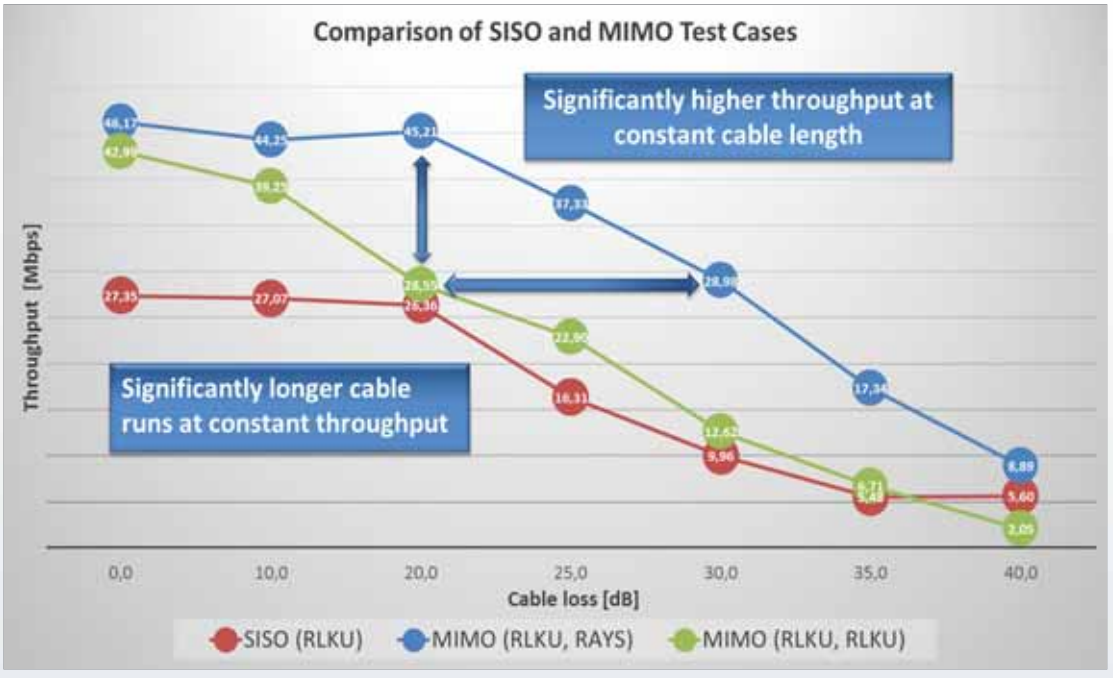

Overcoming the Challenges of 4G LTE and MIMO In-Tunnel Wireless Connectivity

Mobile wireless makes the transition to data and video-dominated broadband. Unprecedented demands are placed on operator networks. Thus, 4G LTE networks are deployed worldwide mainly in macro environments to serve the increasing demand of data throughput for all kinds of mobile users at any places. However, specifically for in-tunnel applications, deployment of 4G network has just started.

Even if LTE, almost often in combination with MIMO technology, has already been deployed for a while in a number of macro networks, the technological constraints and challenges for in-tunnel applications based on radiating cables is quite new. The study clearly demonstrates that MIMO conditions in a tunnel environment can be achieved with two separated radiating cables installed at the tunnel wall. Even if the individual signal paths might be correlated to a certain extent, the highly-reflective environment ensures proper MIMO conditions.

The direct comparison of the SISO and of the two MIMO test cases reveals the clear advantage of using MIMO in tunnels to provide a higher data throughput based on two radiating cables with different dominant main polarization different from each other. This approach allows for significantly higher data throughput at a constant cable length compared to the other two cases or allows for significantly longer runs of radiating cable at a constant data throughput.

RFS RLK and RAY product families are the perfect match to realize optimized MIMO conditions in a tunnel environment.

RADIO FREQUENCY SYSTEMS

The Clear Choice®

www.rfsworld.com